由 Autodesk 教育版产品制作

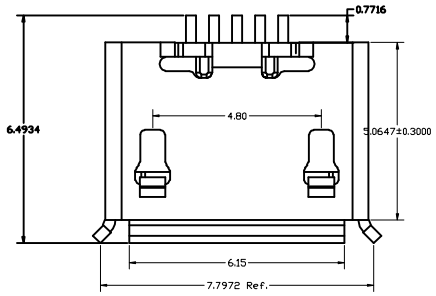

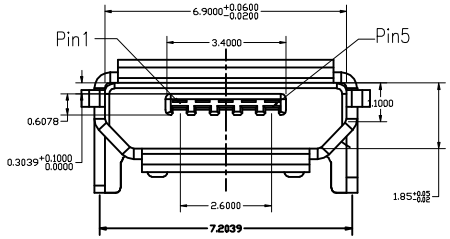

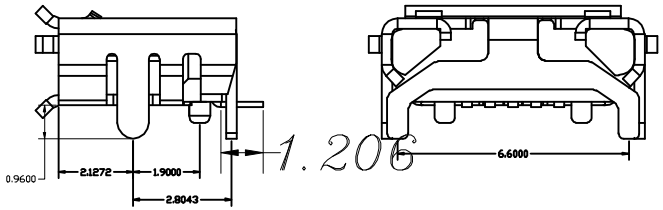

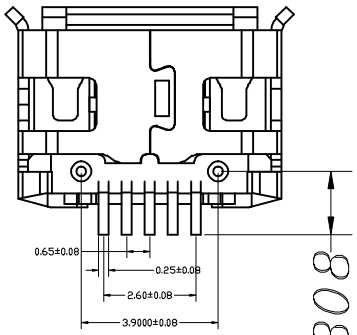

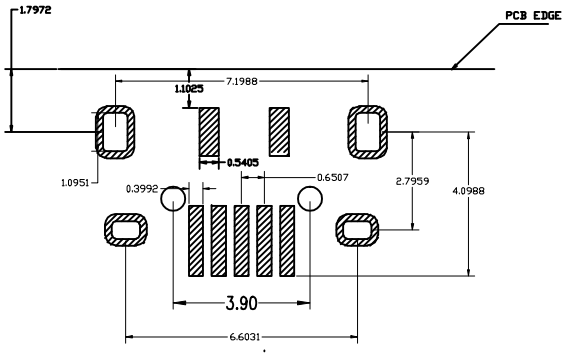

Note:
1.Material:
- 1.1 Housing: High temperature thermoplastic with g.f,UL94v-0
- 1.2 Contact: copper alloy,t=0.15mm
- 1.3 Shell: copper alloy,t=0.30mm

2.Specification:
- 2.1 Current rating: 1 A Max.
- 2.2 Dielectric withstanding voltage: 100 V(ac) for 1 min.
- 2.3 Contact resistance: 50 mW Max.
- 2.4 Insulation resistance: 100 MW Min.
- 2.5 Total mating force: 3.57 Kgf Max.
- 2.6 Total unmating force: 1.0 Kgf Min.0.81~2.05 Kgf Min.
- 2.7 Temperature range: -30°C~80°C

A 01 S B 1 4 1 B 1-345
① ② ③④ ⑤⑥⑦⑧⑨ ⑩

① ????	A:??	⑥ ????	4:C5191R-EH
② ????	01:micro usb 5pin	⑦ ????	1:LCP
③ ????	S:??	⑧ ????	B:??
④ ????	B:B TYPE	⑨ ????	1:DIP
⑤ ????	1:C2680R-H 7:SUS304R-1/2H	⑩ ????	345:MIRCO USB 5S B TYPE ????(???)?76.6?

A01SB141B1-345	SEE NOTE	
XX	SEE NOTE	
	SEE NOTE	MIRCO USB 5S B TYPE 四脚全插(牛角型)长针6.6版
	xiayouhong	A345 A
		5:1 2012.05.02

由 Autodesk 教育版产品制作
由 Autodesk 教育版产品制作
由 Autodesk 教育版产品制作